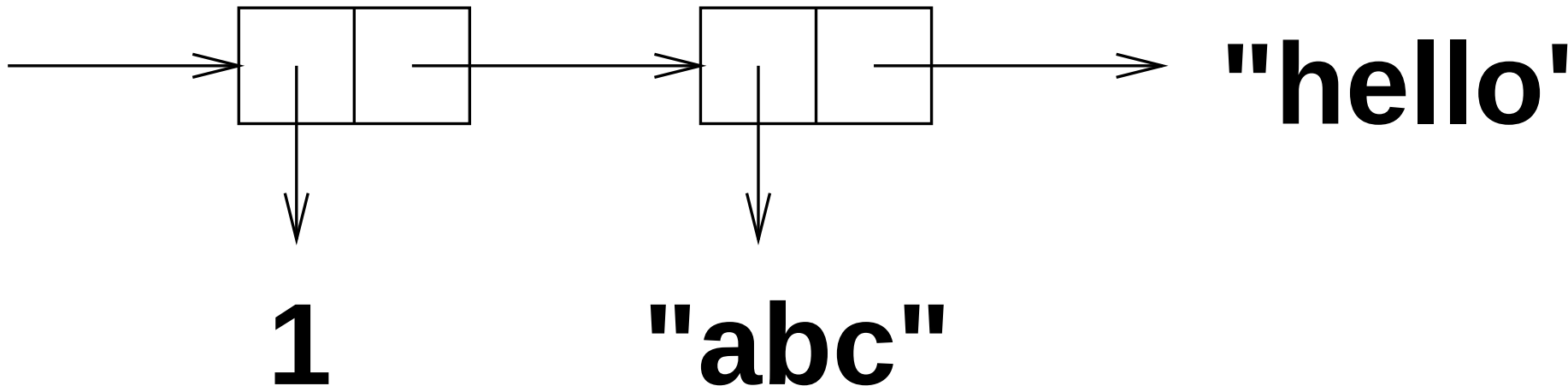
"hello"
1
"abc"