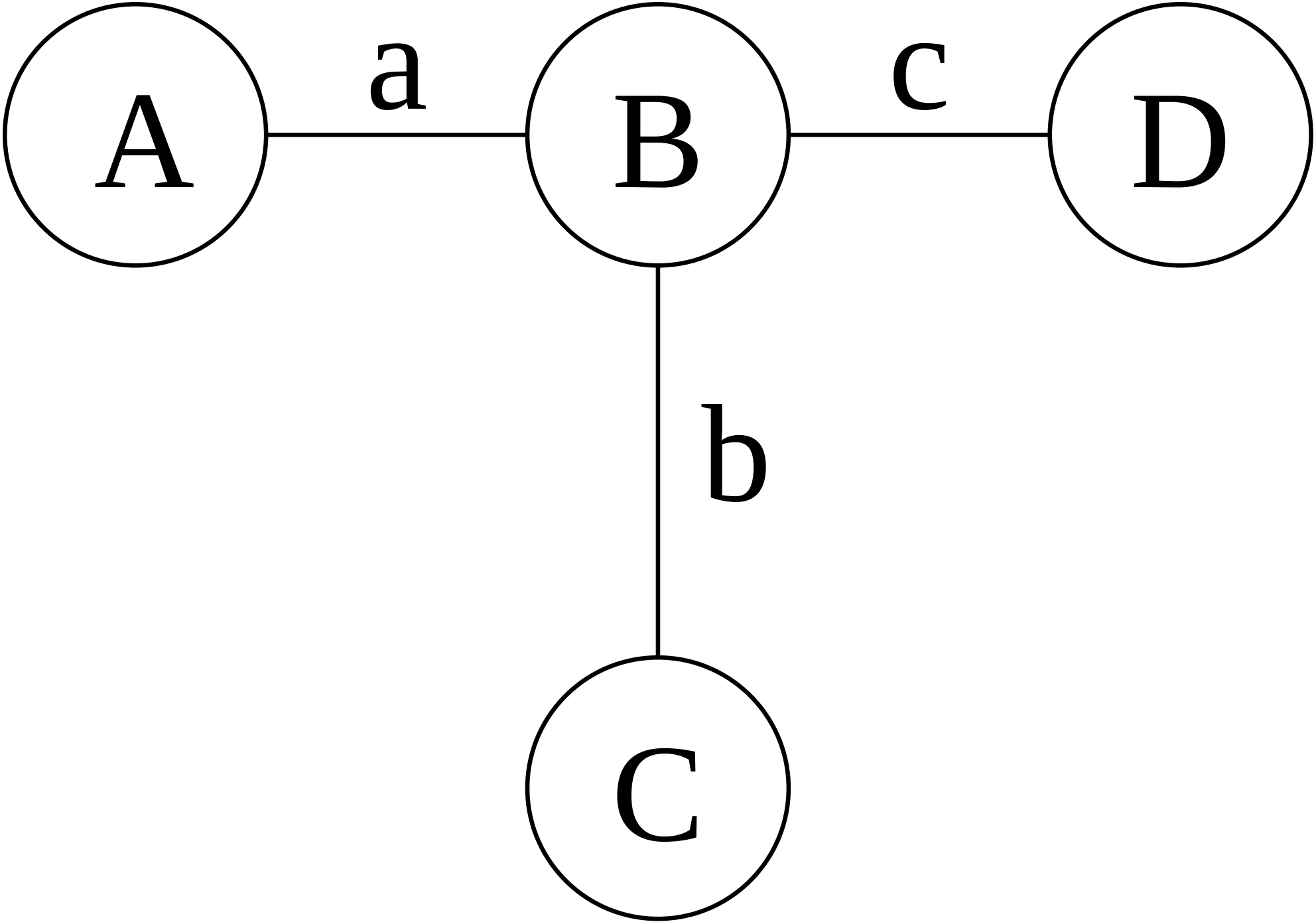
A
a
B
c
D
b
C